VIAIR®
Your Vital Air Source

450P- RV AUTOMATIC PORTABLE COMPRESSOR EXTREME SERIES

PART NO. 45053

IMPORTANT:
It is essential that you and any other operator of this product read and understand the contents of this manual before installing and using this product.

SAVE THIS MANUAL FOR FUTURE REFERENCE

USER MANUAL

CE

IMPORTANT SAFETY INSTRUCTIONS:

CAUTION: To reduce risk of electrical shock or electrocution:
- Do not disassemble. Do not attempt repairs or modifications.
  Refer to qualified service agencies for all service and repairs.
- Do not use this product in or area where it can fall or be pulled into water or other liquids.
- Do not reach for this product if it has fallen into liquid.
- Use this compressor with 12-volt DC systems only.
- This product should never be left unattended during use.

WARNING: To prevent injury:
- Never allow children to operate this compressor.
  Close supervision is necessary when this compressor is being used near children.
- This compressor will become very HOT during and immediately after use.
  Do not touch any part of this compressor with bare hands, other than the ON/OFF switch during and immediately after use.
- Do not use this product near flames or explosive materials or where aerosol products are being used.
- Do not operate this product where oxygen is being administered.
- Do not pump anything other than atmospheric air.
- Never use this product while sleepy or drowsy.
- Do not use any tools or attachments without first determining maximum air pressure for that tool or attachment.
- Never point any air nozzle or air sprayer toward another person or any part of the body.
- This air compressor is equipped with an Automatic Reset Thermal Protector, and can automatically restart after the thermal protector resets. Always cut off power source when thermal protector becomes activated.
- Wear safety glasses or goggles when operating this product.
- Use only in well ventilated areas.
- After usage, always release excess pressure from the coil hose by turning On/Off switch to the Off position, disconnect hose from compressor, with the tire inflation gun still connected to the other end of the coil hose, pull trigger on the tire inflation gun to release excess pressure.

OPERATING INSTRUCTIONS:

Please read and follow the operating instructions carefully to assure that you will enjoy the convenience and best use out of your air compressor.

1. Always operate the compressor AT OR BELOW THE MAXIMUM PRESSURE RATING of the compressor. Refer to Specifications section of this manual.
2. Always OBSERVE THE MAXIMUM DUTY CYCLE of the air compressor. Refer to Specifications section of this manual for details. Operations exceeding maximum pressure ratings and or duty cycle will result in damage to air compressor.
3. Your air compressor is equipped with an AUTOMATIC THERMAL OVERLOAD PROTECTOR. This feature is designed to protect the air compressor from over-heating and causing permanent damage to your air compressor. The thermal overload protector will automatically cut off power to air compressor should internal operating temperature of the air compressor rise above safe levels during excessive use.
4. Should your compressor shut off suddenly after extended use, do not attempt to restart air compressor. Turn ON/OFF switch of air compressor to the OFF position. The automatic thermal overload protector will automatically reset when internal temperature of the air compressor drops below safe level. After allowing air compressor to cool off for about 30 minutes, you can safely resume use of the air compressor by turning on the air compressor.
5. For your convenience, and to protect the air compressor from over-pressure operation that can cause permanent damage to the unit - this compressor is equipped with built-in pressure switch with a factory set cut-on pressure of 120 PSI (± 5%) and a factory set cut-off pressure of 145 PSI (± 5%). During inflation of tire pressures between 115 PSI to 145 PSI, if you stop inflation, the compressor may not restart. This is completely normal, since inline pressure is greater than cut-on pressure of the pressure switch and less than cut-off pressure of the pressure switch. To restart compressor, deflate tire pressure to below 115 PSI, reconnect tire chuck to tire valve stem and resume tire inflation.
6. Please note that you may experience a slight delay of the compressor's motor starting when the ON/OFF switch is turned on while compressor is pressurized (when there is pressure in the line that the compressor is connected to). This is a normal delayed reaction, not a Compressor ON/OFF switch malfunction.
7. It is strongly recommended that you keep the vehicle's engine running while using the air compressor to prevent discharge of your vehicle's battery.
8. ONLY OPERATE THE AIR COMPRESSOR IN WELL VENTILATED AREAS. Compressor performance is enhanced when operating compressor with vehicle engine running.

IMPORTANT: Engine must be running while using this compressor.
Before attaching air compressor power clamps to your vehicle's battery terminals, check to make sure that the ON\OFF switch of your compressor is in the OFF position. Attach the Positive (+) battery clamp (Red) to the Positive terminal of the battery and the Negative (-) battery clamp (Black) to the Negative terminal of the battery. Always keep your vehicle's engine running while operating compressor to avoid draining your vehicle's battery.

CAUTION: Your Portable Air Compressor is Moisture and Dust Resistant, but NOT WATER OR DUST PROOF. Never place compressor in soft sand while running the compressor. Vibration from the compressor will cause the compressor to settle into soft sand, resulting in compressor drawing in foreign particles. Never expose compressor to water while running the compressor.

OPERATING INSTRUCTIONS (cont'd):

This air compressor comes with 1/4" quick connect stud. An extension coil hose and a tire inflation gun are also included with your compressor. Each end of the extension coil hose is equipped with a 1/4" quick connect coupler. The tire inflation gun comes with a 1/4" quick connect stud, pressure gauge, rubber hose, bleeder valve and tire chuck. Attach one end of the extension coil hose to the stud on your compressor and the other end to the stud on the tire gun kit. The tire gun kit can be used for both airing up and airing down. Please familiarize yourself with the following functions of this versatile air tool:

TIRE INFLATION:

1. Attach one end of the extension coil hose to the compressor and the other end to the tire gun kit.
2. Push the tire chuck, with the lever in the upright position, down over the tire valve stem and then push the lever down to the horizontal position to lock in place.
3. Turn compressor switch on and hold down the trigger on the tire gun kit to begin inflation.
4. When desired pressure is reached, release the trigger and turn power switch on compressor off.

NOTE: To release excess pressure, turn off compressor and disconnect hose from compressor. With the tire inflation gun still connected to the other end of the coil hose, pull trigger on the tire inflation gun to release excess pressure.

CAUTION: To avoid over inflation, never exceed recommended pressure on articles to be inflated. Bursting can cause serious injury.

NOTE: Your air compressor is equipped with a pressure switch (cut in at 120psi, cut out at 145psi). This feature is designed to protect the air compressor from over-pressure causing permanent damage to your air compressor. The pressure switch automatically turns off the motor when the internal pressure of the air compressor reaches the factory set "cut-out" pressure (145psi) and restarts when the internal pressure drops below 120psi.

TIRE DEFLATION:

1. Push the tire chuck (with the lever in the upright position) down over the tire valve stem and then push the lever down to the horizontal position to lock in place.
2. Press the bleeder valve button on the tire gun kit to decrease tire pressure.
3. When desired pressure is reached, release the bleeder valve button to halt deflation.

IMPORTANT: Make sure compressor sits upright while operating compressor. Do not operate compressor in any other position. Avoid tugging at compressor to move it. Instead, move compressor to the same side of vehicle as tires that are being aired up.

Always make sure the Portable Compressor's power cord is uncoiled and fully extended when using your air compressor to avoid overheating the power cord.

INLINE PRESSURE GAUGE:

1. The pressure gauge on the inflation gun provides convenient tire pressure monitoring when airing up or down (not airflow of the compressor). This eliminates switching back and forth between a tire chuck and a tire pressure gauge.
2. Please note that during inflation and deflation, due to air velocity, pressure gauge cannot provide accurate pressure readings. Release lever on the tire inflation gun during inflation to check tire air pressure.

NOTE: To release excess pressure, turn off compressor and disconnect hose from compressor. With the tire inflation gun still connected to the other end of the coil hose, pull trigger on the tire inflation gun to release excess pressure.

450P-RV-AUTOMATIC ACCESSORIES:

45-Degree Extended Reach, Angled Chuck:
Open-ended air chuck allows reach into areas difficult to reach by hand.
Connects to Tire Inflation Gun.

90-Degree Twist-on Chuck:
This open-ended air chuck can be attached to any inflation valve where there is limited clearance.

Primary Hose & Extension Hoses:
Dual hoses, with quick connect couplings.

Tire Inflation Gun:
Normally closed-ended chuck, (until lever is engaged) all air chucks attach to the Tire Inflation Gun with quick connect couplings.

SAFETY PRECAUTIONS:

1. Always inflate tires to manufacturer's recommended tire pressures. Exercise extreme caution when driving with aired-down tires. Reinflate tires before high-speed roadway travel.
2. Never exceed 20 M.P.H. when driving with partially inflated tires.
3. Never make sharp turns while driving with reduced tire pressure.
4. Re-inflate tires before high speed traveling onto roadways.
5. Use heat-resistant, minimum 200 PSI-rated working pressure extension hose.
   Do not use aftermarket hoses with less than 200 PSI working pressure. Some aftermarket hoses may not be suitable for use with this air compressor due to heat and pressure typically generated by this type of air compressors.

CAUTION: Never touch the air compressor or fittings connected to the air compressor other than the ON/OFF switch with bare hands during or immediately after use. The extension hose and fittings connected extension hose will become very HOT during and after use. If necessary, wear heat resistant gloves to remove hose from the compressor quick connect stud.

MAINTENANCE & REPAIRS:

Your air compressor is equipped with permanently lubricated, maintenance-free motor.
Never try to lubricate the compressor. Regularly clean dust and dirt from compressor cooling fins and motor housing. All repairs should be performed by Manufacturer or Manufacturer authorized service agencies only.

INLET AIR FILTER INSTALLATION INSTRUCTION:

1. Check to make sure air filter element is properly installed in your Inlet Air Filter Assembly
2. Remove the temporary protective red plug from compressor's air inlet port.
3. Install inlet air filter onto compressor's air inlet port. (Teflon tape Not Recommended).
4. Hand tighten inlet air filter.

IMPORTANT: For optimal compressor performance, replace filter element periodically. Clogged filter will drastically reduce compressor flow rate and performance.

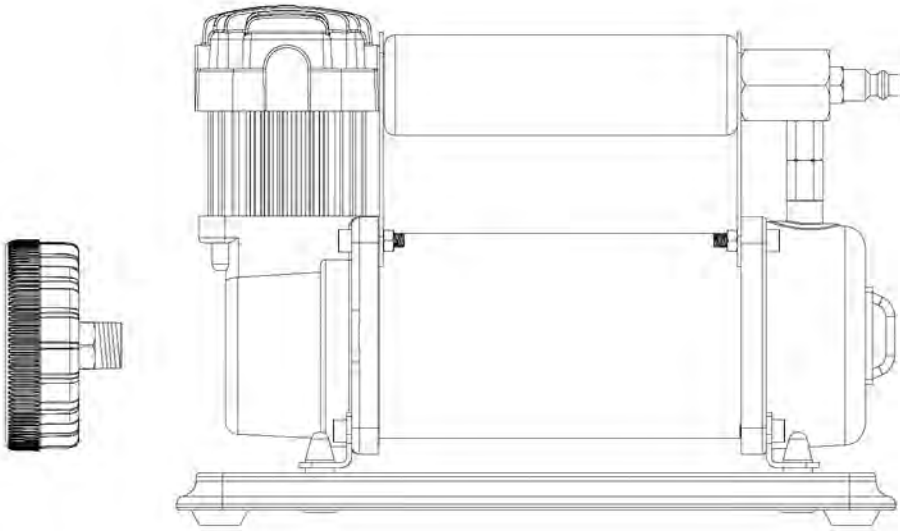

TROUBLESHOOTING GUIDE:

PROBLEM:	POSSIBLE CAUSE(S)	CORRECTIVE ACTION
Compressor will not run	1. No power, or power switch in OFF position 2. Blown fuse 3. Motor overheats	1. Make sure compressor switch is ON 2. Disconnect compressor from power source, replace fuse. (Refer to Specifications section for correct fuse amperage) 3. Let compressor cool off for about 30 minutes to allow thermal overload switch to reset.
Thermal overload protector cuts out repeatedly	1. Lack of proper ventilation or ambient temperature is too high 2. Compressor valves failed	1. Move compressor to well ventilated area, or area with lower ambient temperature 2. Service or replace compressor
Excessive knocking or rattling	1. Worn bearing on eccentric or motor shaft 2. Cylinder or piston ring is worn	1. Service or replace compressor
Compressor air flow lower than normal, or cannot pump to higher pressures	1. Worn piston ring or inlet valve	1. Service or replace compressor

MODEL 450P-RV AUTOMATIC SPECIFICATIONS:

Part Number:	45053 / 450P-RV Automatic
Motor Voltage:	12-volt
Motor Type:	Permanent Magnetic
Max. Intermittent Pressure:	150 PSI
Max. Duty Cycle:	100% (Continuous)
(Min. On/Off @ 72ºF & 100 PSI)	
Continuous Use @ 72ºF & 30 PSI:	Continuous
Max. Current Consumption:	23 Amps
Fuse:	30 Amps
Inline Pressure Gauge:	130 PSI
Built-in Pressure Switch:	120 PSI On, 145 PSI Off
Auto. Reset Thermal Protection:	Yes

LIMITED WARRANTY:

VIAIR Corporation warrants this product, when properly installed and under normal conditions of use, to be free from defects in workmanship and materials for a period of one year from its original date of purchase. To receive warranty service or repair, please contact VIAIR Corporation.

Returns should be made within one year of the date of purchase, after a Return Goods Authorization (RGA) number has been assigned by VIAIR Corporation. To obtain RGA, fax a copy of your receipt to (949) 585-0188. For complete warranty details, please visit: ***www.viaircorp.com/warranty***

PLEASE NOTE:
THIS WARRANTY COVERS PRODUCT DEFECTS ONLY; IT DOES NOT COVER INCIDENTAL OR CONSEQUENTIAL DAMAGES AS RESULT OF MISUSE OR ABUSE.

VIAIR®
Your Vital Air Source

15 EDELMAN • IRVINE, CA 92618
TEL: (949) 585-0011 • FAX: (949) 585-0188
www.viaircorp.com